RANGEMASTER SYSTEMS

LED Stadium Light

100W~1200W

Features:

* Customized LUMILEDS / CREE LED,150lm/w, CRI Ra80. Junction temperature<70°C.
* TaiWan MeanWell LED Drivers, AC90V~305V, PF>0.98, THD<15%.
* Ultra-low luminous decay <10% in 5 years. L70>50,000hrs. Design lifespan 50,000hrs.
* light transmittance of PC up to 93%.
* 30°/ 60°/ 90°x135° beam angles and excellent uniformity.
* Intel ligent dimming system. 0-10V, DMX and DALI dimming modelsare available.

DLC ETL FC CE RoHS LM79 LM80 IP66 RATED 1 year warranty

RANGEMASTER SYSTEMS

Maxima WarenhandelsGmbH © Rangemaster Systems
Dr. Robert Graf Straße 64/9, Graz, A-8010, Austria/Europe
Phone: +43 699 104 03 204 Fax: +43 720 920 195
Mail: info@rangemaster.at Web: www.rangemaster.at

RANGEMASTER SYSTEMS

LM79 LM80 1 year warranty

100W LED Floodlight

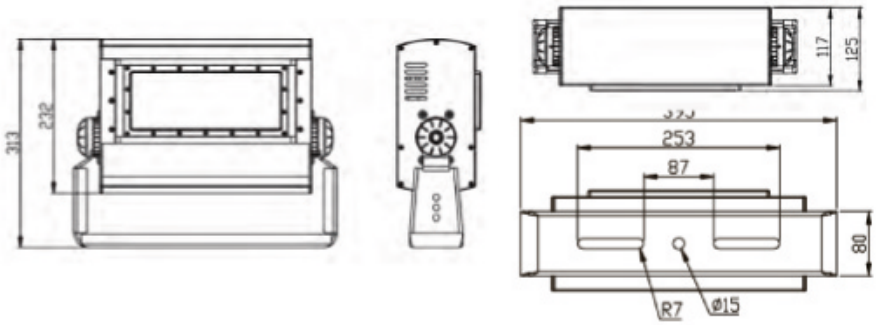

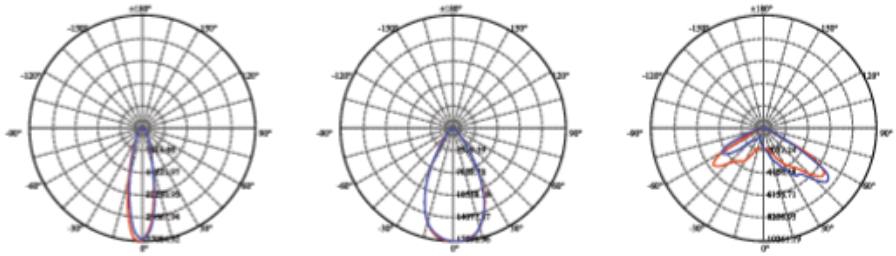

30° 60° 90°*135°

Model	RMS-FL-L2-100W
Wattage	100W
Luminous Flux	15000Lm
Color Temperature	2700K~6500K
Input Voltage	AC100-277V, 50-60Hz
LED Brand	LUMILEDS / CREE SMD5050
Light Source Count	38PCS
Power supply	MeanWell ELG
Driver Qty	1PCS
Beam Angle	30°/ 60°/ 90°x135°

CRI	Ra>70
PF	>0.9
Surge Voltage	20,000V
INRUSH CURRENT(Typ)	COLD START 60A(twidth=510μs measured at 50%Ipeak)at 230VAC
LEAKAGE CURRENT	<0.75mA/277VAC
Working Temperature	-40℃~+45℃
Storage Temperature	-40℃~+50℃(Best 25℃)
IP Rating	IP67
Life Hours	50,000H
Net weight	7KG

200W LED Floodlight

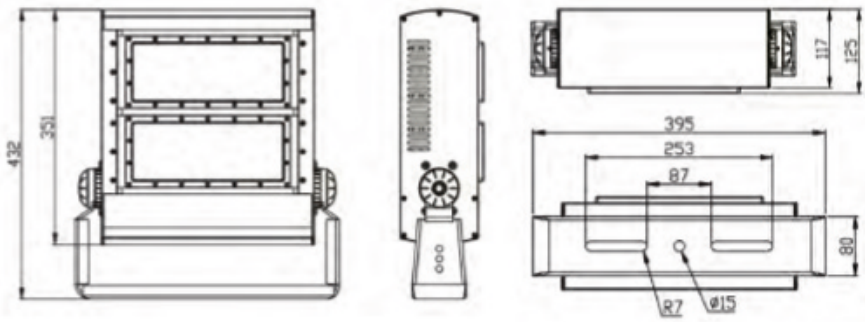

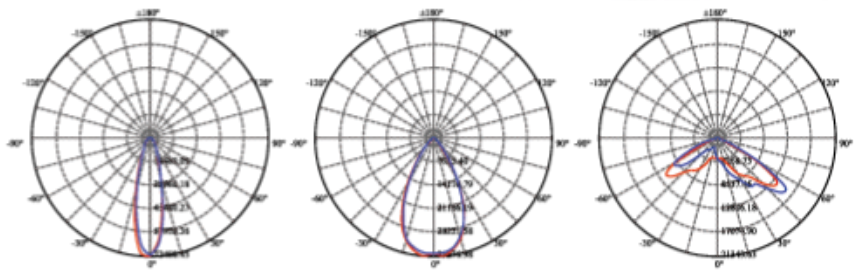

30° 60° 90°*135°

Model	RMS-FL-L2-200W
Wattage	200W
Luminous Flux	30000Lm
Color Temperature	2700K~6500K
Input Voltage	AC100-277V, 50-60Hz
LED Brand	LUMILEDS / CREE SMD5050
Light Source Count	76PCS
Power supply	MeanWell ELG
Driver Qty	1PCS
Beam Angle	30°/ 60°/ 90°x135°

CRI	Ra>70
PF	>0.9
Surge Voltage	20,000V
INRUSH CURRENT(Typ)	COLD START 60A(twidth=510μs measured at 50%Ipeak)at 230VAC
LEAKAGE CURRENT	<0.75mA/277VAC
Working Temperature	-40℃~+45℃
Storage Temperature	-40℃~+50℃(Best 25℃)
IP Rating	IP67
Life Hours	50,000H
Net weight	10.5KG

RANGEMASTER SYSTEMS

LM79 LM80 1 year warranty

300W LED Floodlight

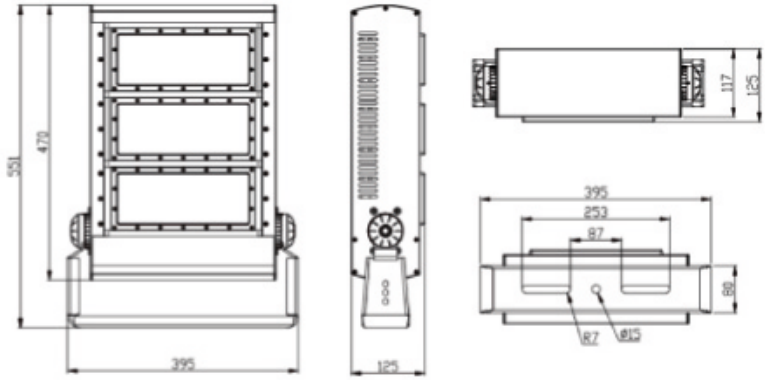

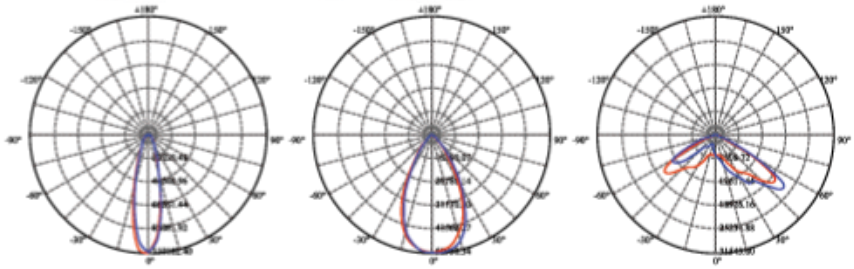

30° 60° 90°*135°

Model	RMS-FL-L2-300W
Wattage	300W
Luminous Flux	45000Lm
Color Temperature	2700K~6500K
Input Voltage	AC100-277V, 50-60Hz
LED Brand	LUMILEDS / CREE SMD5050
Light Source Count	114PCS
Power supply	MeanWell ELG
Driver Qty	1PCS
Beam Angle	30°/ 60°/ 90°x135°

CRI	Ra>70
PF	>0.9
Surge Voltage	20,000V
INRUSH CURRENT(Typ)	COLD START 60A(twidth=510us measured at 50%Ipeak)at 230VAC
LEAKAGE CURRENT	<0.75mA/277VAC
Working Temperature	-40℃~+45℃
Storage Temperature	-40℃~+50℃(Best 25℃)
IP Rating	IP67
Life Hours	50,000H
Net weight	12KG

400W LED Floodlight

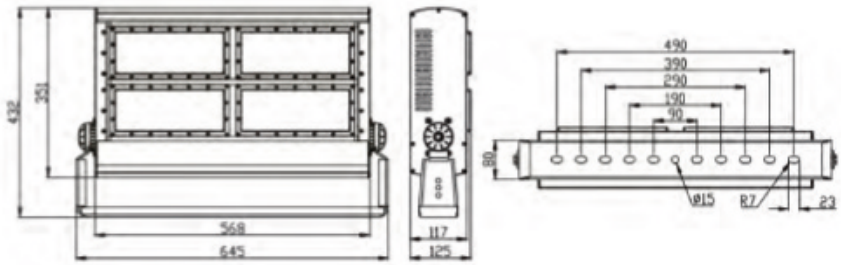

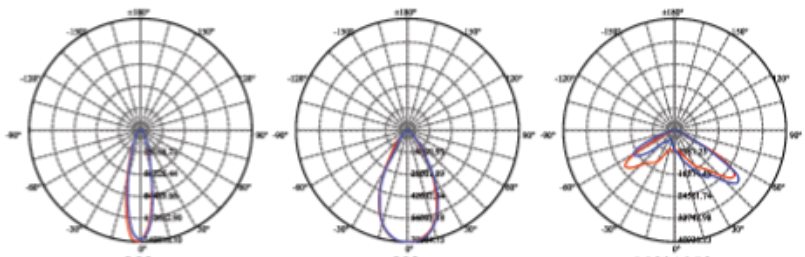

30° 60° 90°*135°

Model	RMS-FL-L2-400W
Wattage	400W
Luminous Flux	60000Lm
Color Temperature	2700K~6500K
Input Voltage	AC100-277V, 50-60Hz
LED Brand	LUMILEDS / CREE SMD5050
Light Source Count	152PCS
Power supply	MeanWell ELG
Driver Qty	2PCS
Beam Angle	30°/ 60°/ 90°x135°

CRI	Ra>70
PF	>0.9
Surge Voltage	20,000V
INRUSH CURRENT(Typ)	COLD START 60A(twidth=510us measured at 50%Ipeak)at 230VAC
LEAKAGE CURRENT	<0.75mA/277VAC
Working Temperature	-40℃~+45℃
Storage Temperature	-40℃~+50℃(Best 25℃)
IP Rating	IP67
Life Hours	50,000H
Net weight	15KG

RANGEMASTER SYSTEMS

LM79 LM80 1 year warranty

600W LED Floodlight

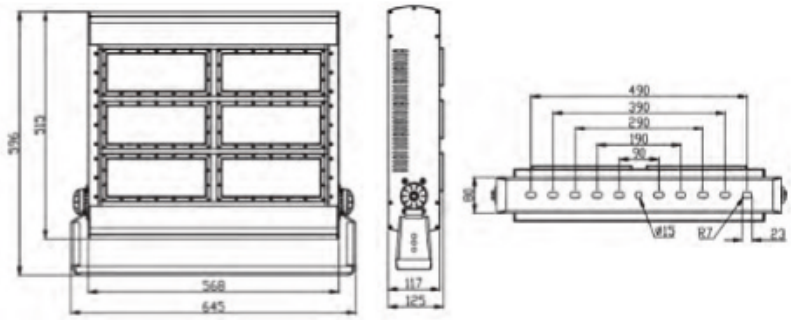

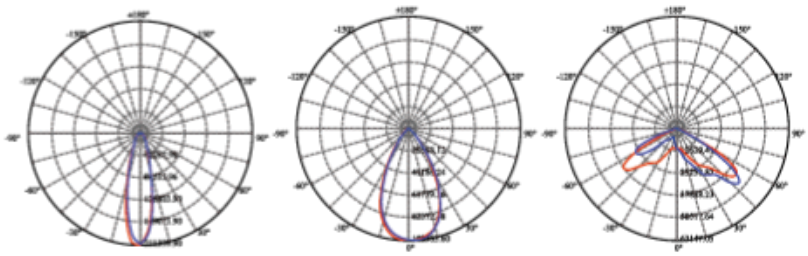

30° 60° 90°*135°

Model	RMS-FL-L2-600W
Wattage	600W
Luminous Flux	90000Lm
Color Temperature	2700K~6500K
Input Voltage	AC100-277V, 50-60Hz
LED Brand	LUMILEDS / CREE SMD5050
Light Source Count	228PCS
Power supply	MeanWell ELG
Driver Qty	3PCS
Beam Angle	30°/ 60°/ 90°x135°

CRI	Ra>70
PF	>0.9
Surge Voltage	20,000V
INRUSH CURRENT(Typ)	COLD START 60A(twidth=510us measured at 50%Ipeak)at 230VAC
LEAKAGE CURRENT	<0.75mA/277VAC
Working Temperature	-40℃~+45℃
Storage Temperature	-40℃~+50℃(Best 25℃)
IP Rating	IP67
Life Hours	50,000H
Net weight	20KG

800W LED Floodlight

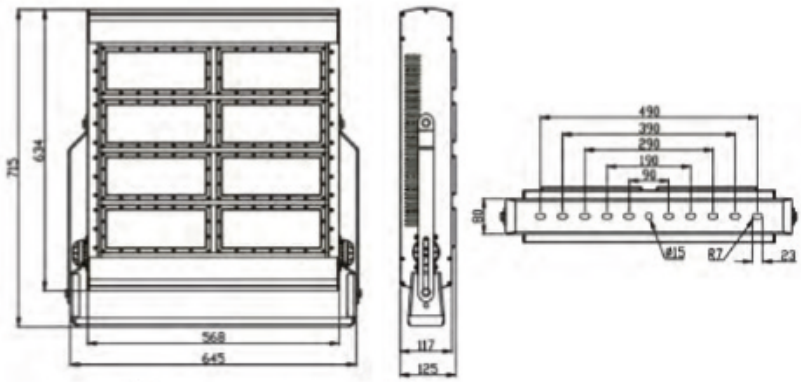

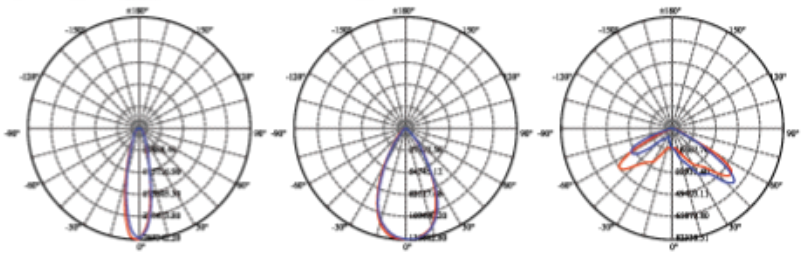

30° 60° 90°*135°

Model	RMS-FL-L2-800W
Wattage	800W
Luminous Flux	120000Lm
Color Temperature	2700K~6500K
Input Voltage	AC100-277V, 50-60Hz
LED Brand	LUMILEDS / CREE SMD5050
Light Source Count	304PCS
Power supply	MeanWell ELG
Driver Qty	4PCS
Beam Angle	30°/ 60°/ 90°x135°

CRI	Ra>70
PF	>0.9
Surge Voltage	20,000V
INRUSH CURRENT(Typ)	COLD START 60A(twidth=510us measured at 50%Ipeak)at 230VAC
LEAKAGE CURRENT	<0.75mA/277VAC
Working Temperature	-40℃~+45℃
Storage Temperature	-40℃~+50℃(Best 25℃)
IP Rating	IP67
Life Hours	50,000H
Net weight	25KG

RANGEMASTER SYSTEMS

LM79 LM80 1 year warranty

1000W LED Floodlight

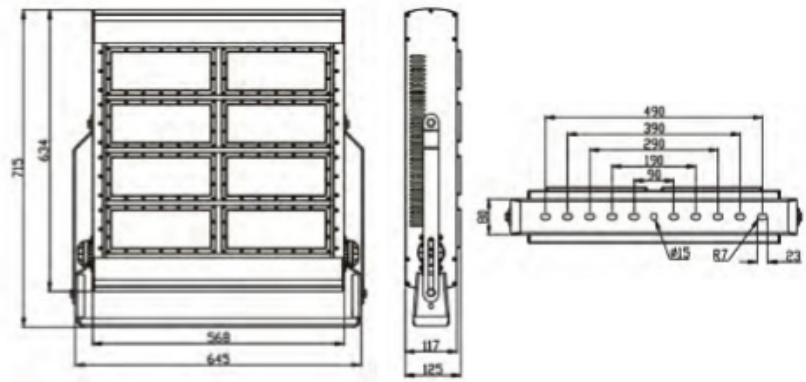

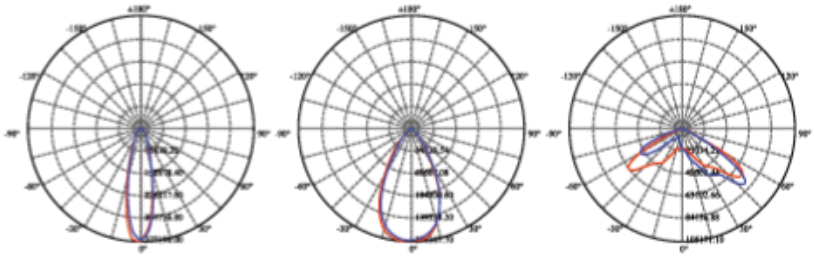

30° 60° 90°*135°

Model	RMS-FL-L2-1000W
Wattage	1000W
Luminous Flux	150000Lm
Color Temperature	2700K~6500K
Input Voltage	AC100-277V, 50-60Hz
LED Brand	LUMILEDS / CREE SMD5050
Light Source Count	304PCS
Power supply	MeanWell ELG
Driver Qty	4PCS
Beam Angle	30°/ 60°/ 90°x135°

CRI	Ra>70
PF	>0.9
Surge Voltage	20,000V
INRUSH CURRENT(Typ)	COLD START 60A(twidth=510us measured at 50%Ipeak)at 230VAC
LEAKAGE CURRENT	<0.75mA/277VAC
Working Temperature	-40℃~+45℃
Storage Temperature	-40℃~+50℃(Best 25℃)
IP Rating	IP67
Life Hours	50,000H
Net weight	29KG

1200W LED Floodlight

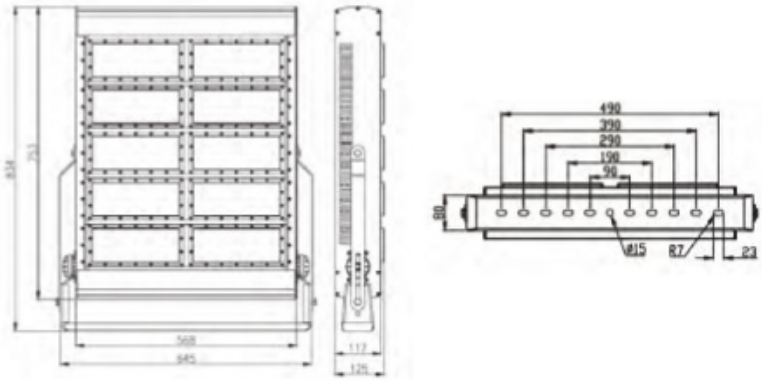

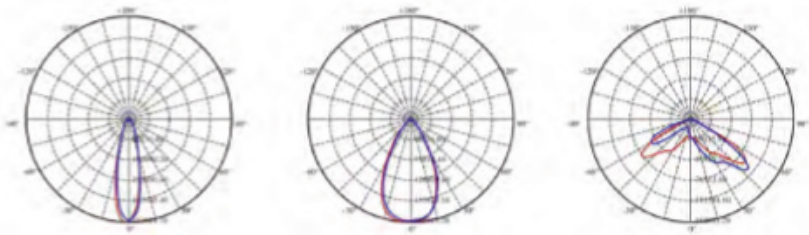

30° 60° 90°*135°

Model	RMS-FL-L2-1200W
Wattage	1200W
Luminous Flux	180000Lm
Color Temperature	2700K~6500K
Input Voltage	AC100-277V, 50-60Hz
LED Brand	LUMILEDS / CREE SMD5050
Light Source Count	380PCS
Power supply	MeanWell ELG
Driver Qty	5PCS
Beam Angle	30°/ 60°/ 90°x135°

CRI	Ra>70
PF	>0.9
Surge Voltage	20,000V
INRUSH CURRENT(Typ)	COLD START 60A(twidth=510us measured at 50%Ipeak)at 230VAC
LEAKAGE CURRENT	<0.75mA/277VAC
Working Temperature	-40℃~+45℃
Storage Temperature	-40℃~+50℃(Best 25℃)
IP Rating	IP67
Life Hours	50,000H
Net weight	32KG

Wiring Diagram:

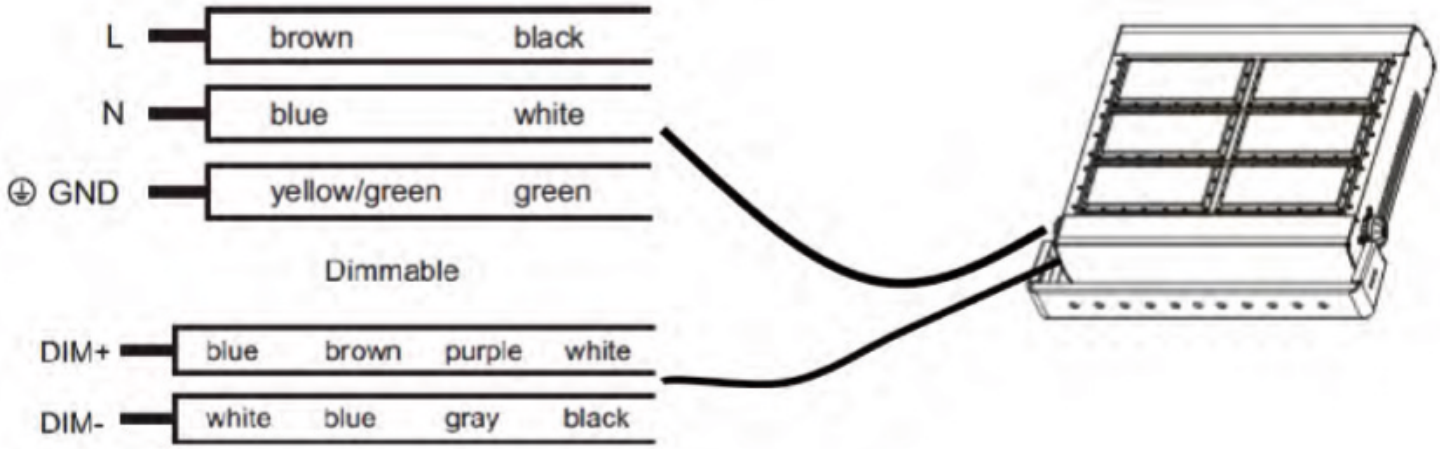

High power connection:

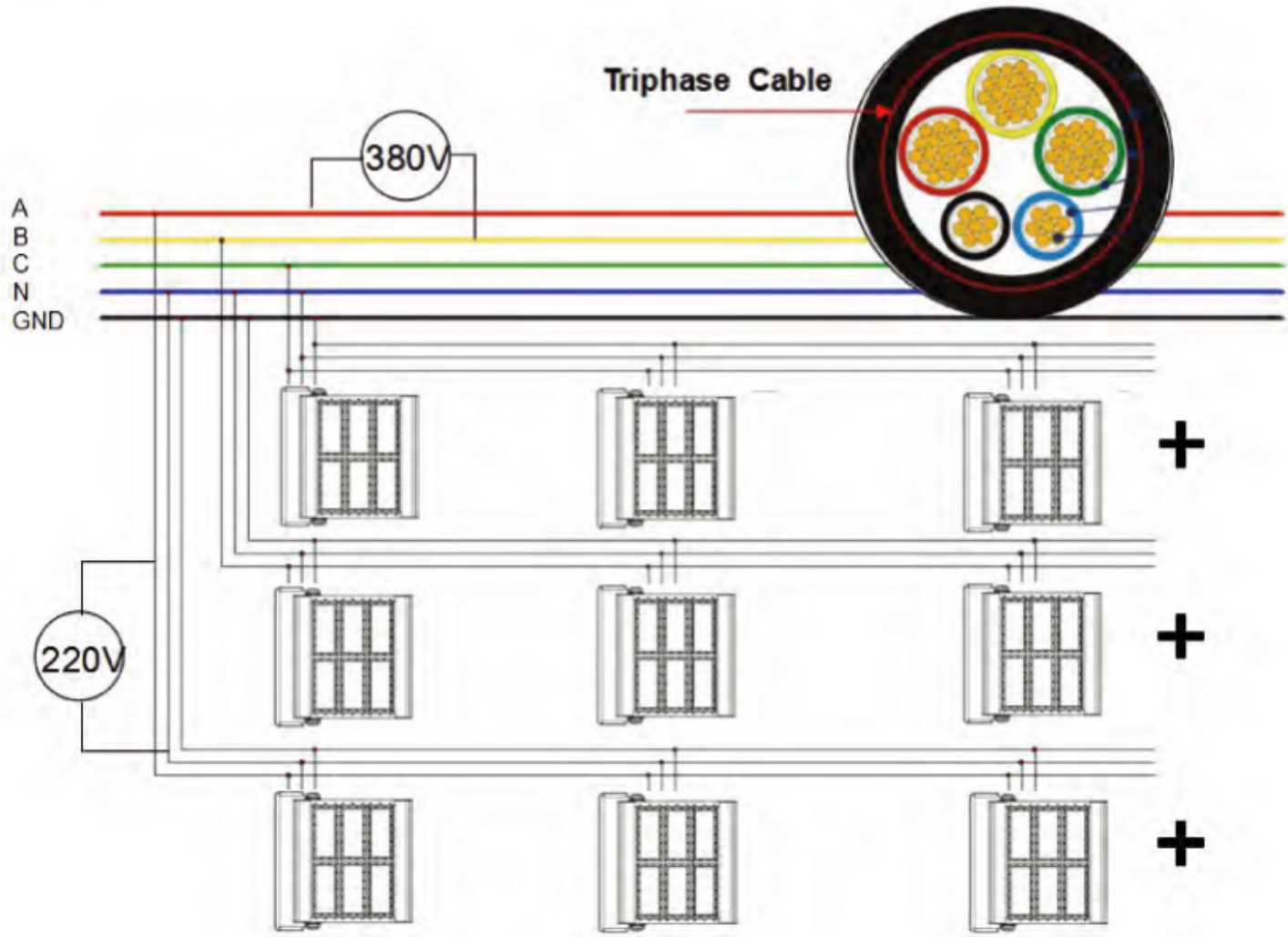

Installation Instruction:

Through the screw, choose and adjust the angle of the bracket you need before installaing.

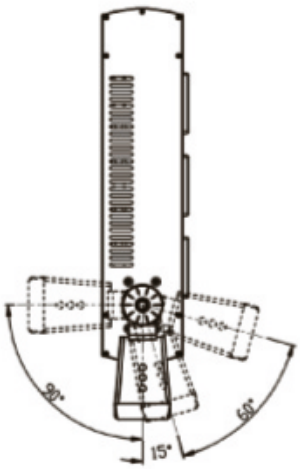

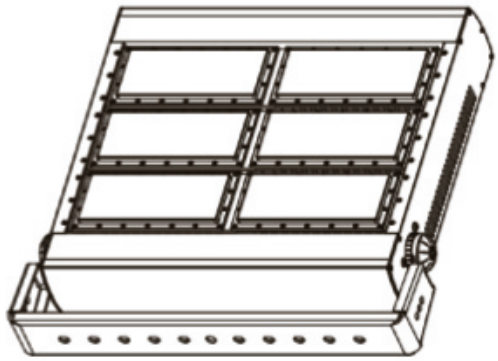

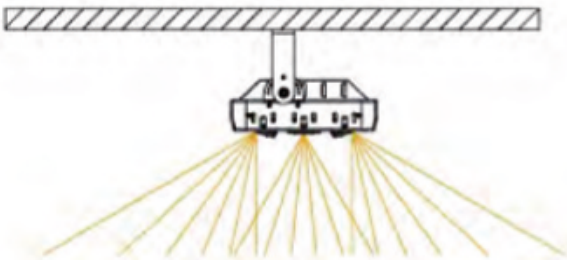

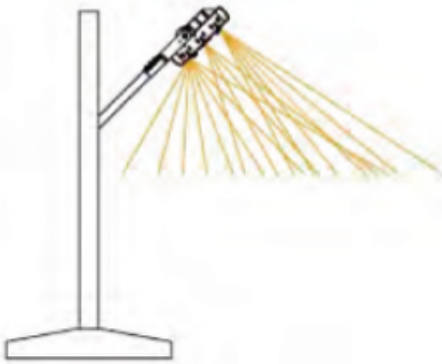

Application:

Applied in large sports field lighting, clay target shooting, football, basketball, golf and tennis court,racetrack, badminton, roads, high-rise buildings, tower lights, etc. Can also be applied in large square, airport, commercial building, construction engineering, farm, amusement parks, parking lots, harbor, industrial buildings, and other special lighting enviroment.

Package :

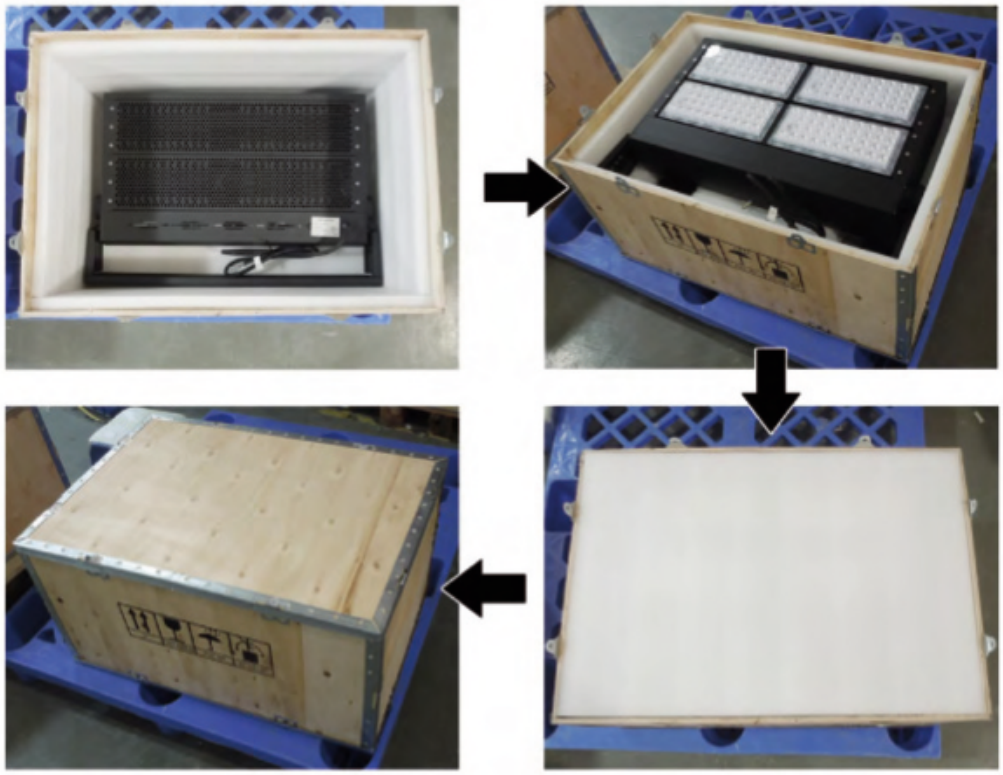

Wattage	PCS/Box	Packing Size(L*W*H) /1unit	N.W.	G.W.
100W	1PCS/Box	465*380*210mm	7Kg	12Kg
	2PCS/Box	465*380*360mm	14Kg	20Kg
200W	1PCS/Box	465*500*210mm	10.5Kg	17Kg
	2PCS/Box	465*500*360mm	21Kg	30Kg
300W	1PCS/Box	465*620*210mm	12Kg	19Kg
	2PCS/Box	465*620*360mm	24Kg	32Kg
400W	1PCS/Box	710*500*210mm	15Kg	22Kg
	2PCS/Box	710*500*360mm	30Kg	40Kg
600W	1PCS/Box	720*670*210mm	20Kg	33Kg
	2PCS/Box	720*670*360mm	45Kg	58Kg
800W/1000W	1PCS/Box	720*790*210mm	25Kg	38Kg
	2PCS/Box	720*790*360mm	50Kg	70Kg
1200W	1PCS/Box	720*910*210mm	29Kg	44Kg
	2PCS/Box	720*910*360mm	58Kg	80Kg